

SHORELUX / OUTDOOR LIVING

MODULAR CABINET SYSTEM

Build the outdoor kitchen around the way you live.

2026 COLLECTION

Designed as a modular platform

Start with a practical configuration today, then add or rearrange modules as your space and cooking needs evolve.

01

CHOOSE A LAYOUT

Straight, L-shaped, U-shaped or island.

02

SELECT FUNCTIONS

Cooking, washing, cooling and storage.

03

FINISH THE SYSTEM

Countertop, door style and color.

02 / FLEXIBLE LAYOUTS

One system. Multiple ways to plan.

Independent modules align, connect and lock into a continuous outdoor-kitchen run.

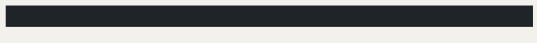

STRAIGHT

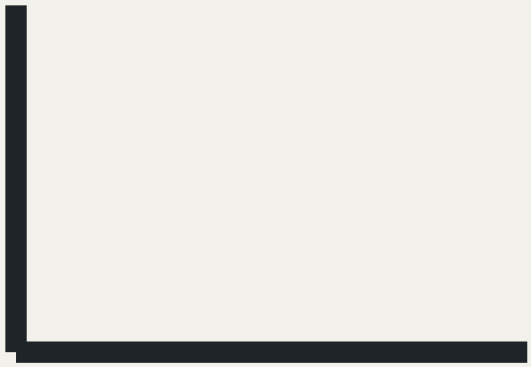

L-SHAPED

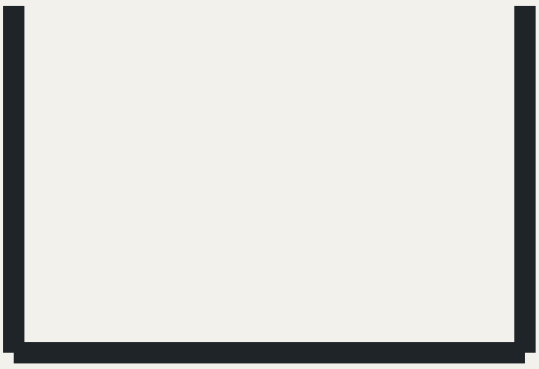

U-SHAPED

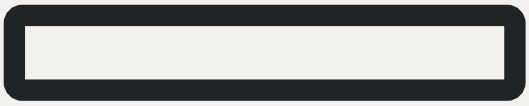

ISLAND

CUSTOM COMBINATIONS

Mix widths and functions to suit walls, corners, islands and appliance requirements.

Build the workflow, module by module

A coordinated family of functional units makes planning clear and future changes simple.

04

450 SERIES

Compact functions

Trash bin · pull-out basket · fridge · ice maker

11

600 SERIES

Core work modules

Sink · drawers · storage · baskets · fridge · open shelf · burner

01

1000 SERIES

Primary cooking

Integrated grill cabinet

03

CORNER + APPLIANCE

Layout solutions

Fridge surrounds · corner connector · corner storage

450 Trash Bin

Waste sorting



BODY	CONFIGURATION	NW / GW	FLAT PACK
6063-T5 aluminum	1 door / soft close	27 / 30 kg	900 × 770 × 250 mm

TECHNICAL DIMENSIONS

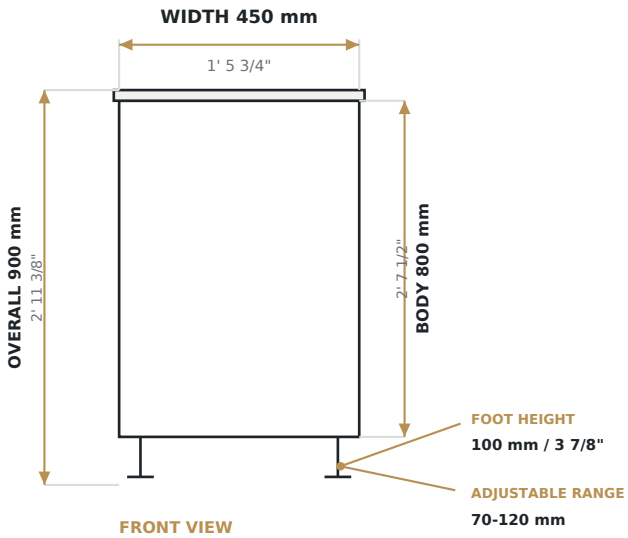

FRONT VIEW

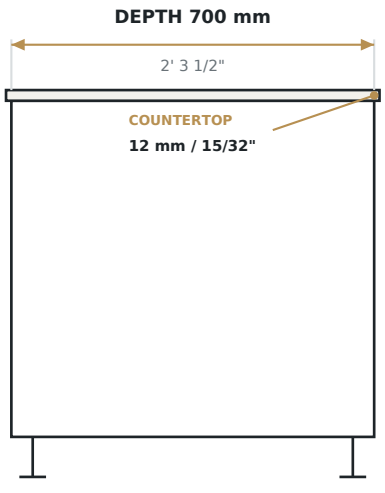

SIDE VIEW

450 Pull-up Basket

Organized storage



BODY	CONFIGURATION	NW / GW	FLAT PACK
6063-T5 aluminum	1 door / pull-out	27 / 30 kg	900 × 770 × 250 mm

TECHNICAL DIMENSIONS

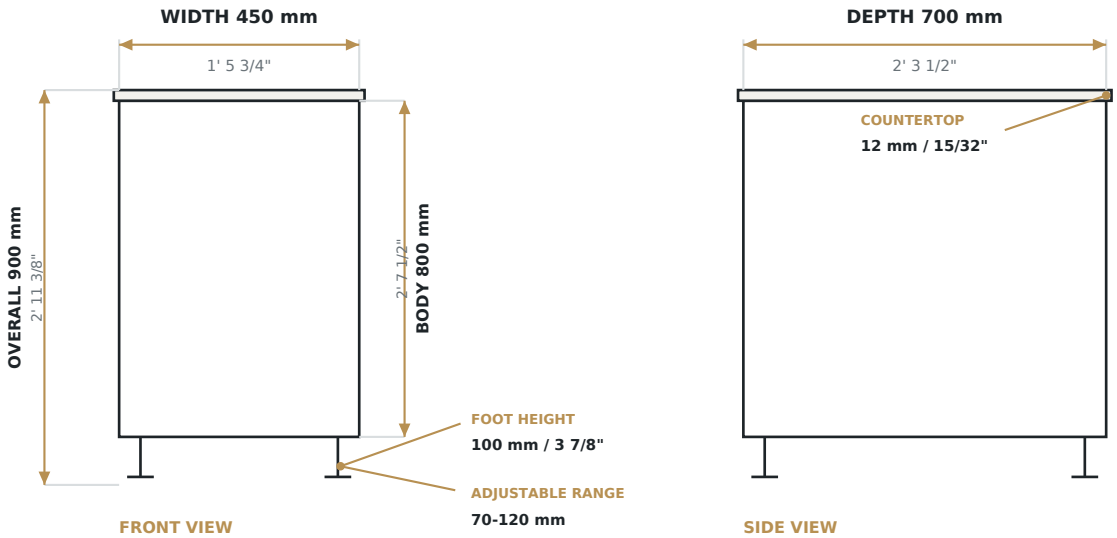

450 Fridge

Cold storage



BODY	CONFIGURATION	NW / GW	FLAT PACK
6063-T5 aluminum	Appliance opening	15 / 17 kg	900 × 770 × 150 mm

TECHNICAL DIMENSIONS

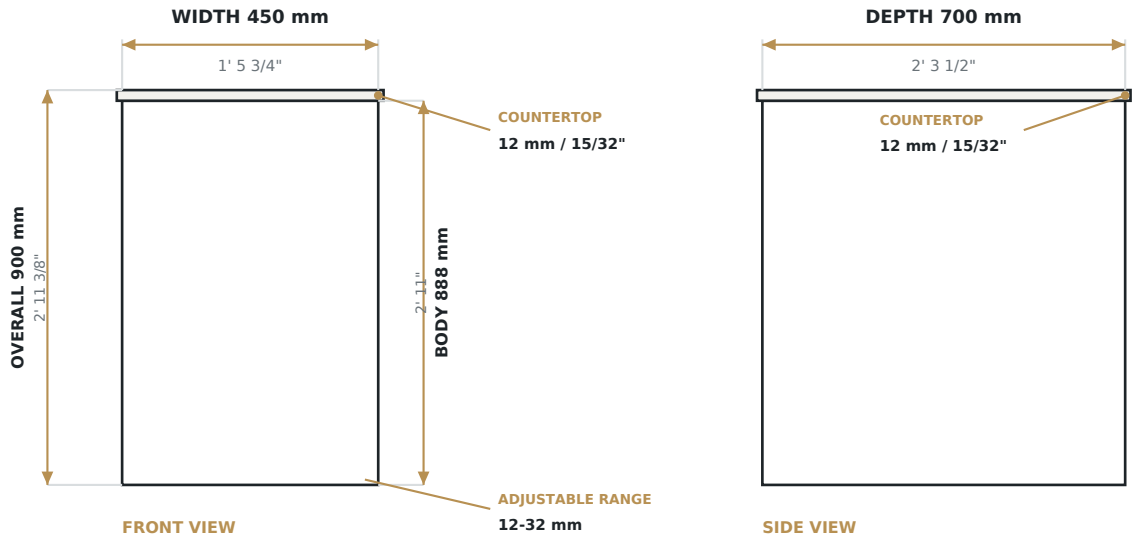

450 Ice Maker

Ice on demand



BODY	CONFIGURATION	NW / GW	FLAT PACK
6063-T5 aluminum	Appliance opening	15 / 17 kg	900 × 770 × 150 mm

TECHNICAL DIMENSIONS

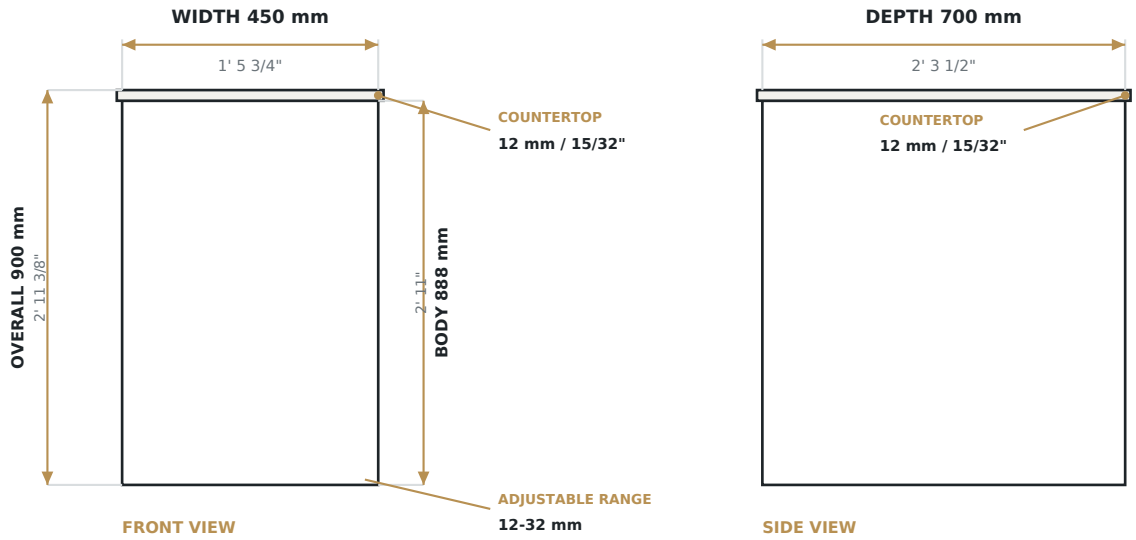

600 Sink

Wash station



BODY	CONFIGURATION	NW / GW	FLAT PACK
6063-T5 aluminum	1 door / sink + tap	30 / 33 kg	900 × 770 × 250 mm

TECHNICAL DIMENSIONS

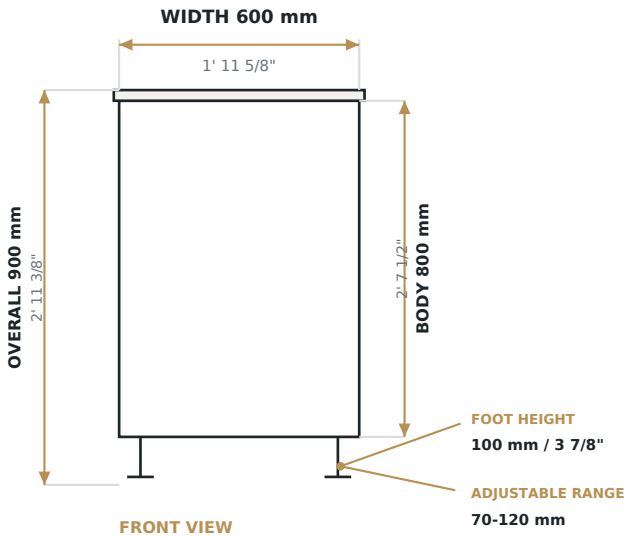

FRONT VIEW

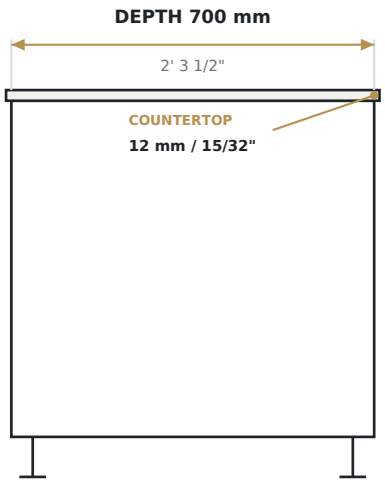

SIDE VIEW

600 Drawers

Three drawers



BODY	CONFIGURATION	NW / GW	FLAT PACK
6063-T5 aluminum	3 drawers	35 / 38 kg	900 × 770 × 250 mm

TECHNICAL DIMENSIONS

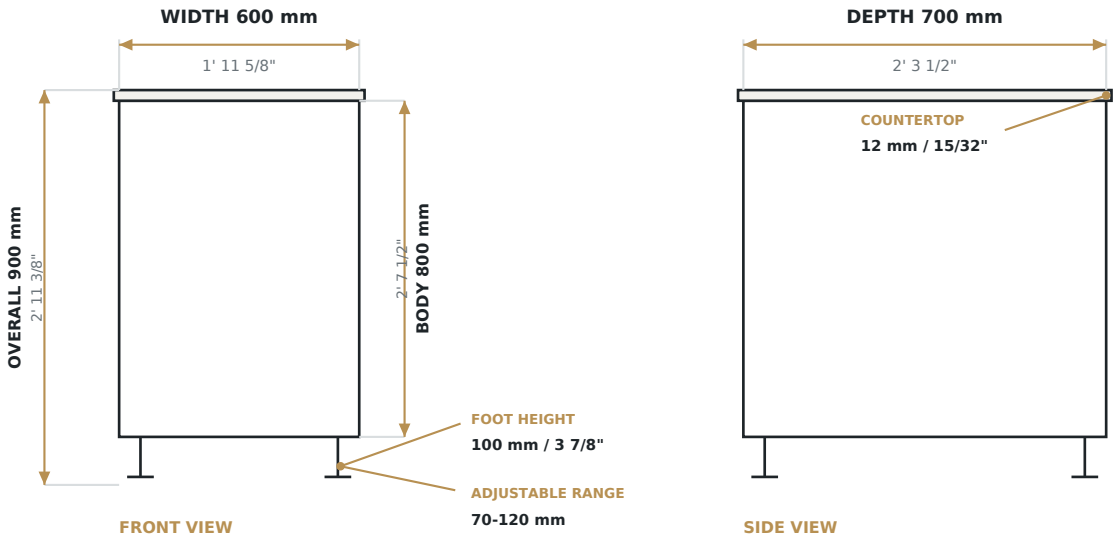

600 Storage

General storage



BODY	CONFIGURATION	NW / GW	FLAT PACK
6063-T5 aluminum	1 door / storage	20 / 23 kg	900 × 770 × 180 mm

TECHNICAL DIMENSIONS

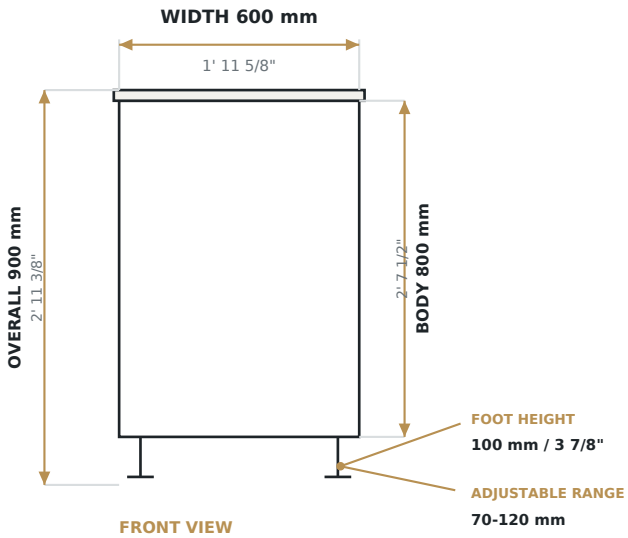

FRONT VIEW

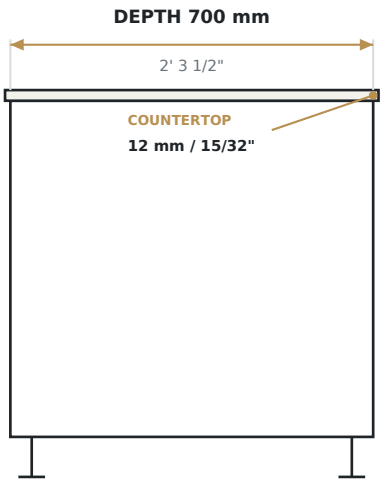

SIDE VIEW

MODULE 08 / 600 SERIES

600 Pull-up Basket

High-capacity pantry



BODY	CONFIGURATION	NW / GW	FLAT PACK
6063-T5 aluminum	1 door / pull-out	30 / 33 kg	900 × 770 × 250 mm

TECHNICAL DIMENSIONS

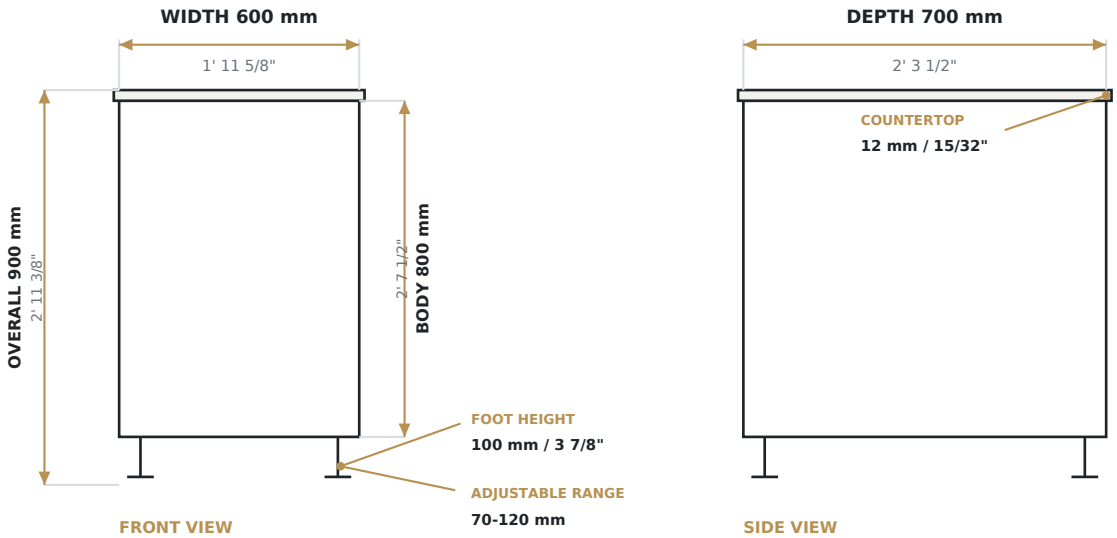

600 Bowl Basket

Tableware storage



BODY	CONFIGURATION	NW / GW	FLAT PACK
6063-T5 aluminum	1 door / bowl rack	30 / 33 kg	900 × 770 × 250 mm

TECHNICAL DIMENSIONS

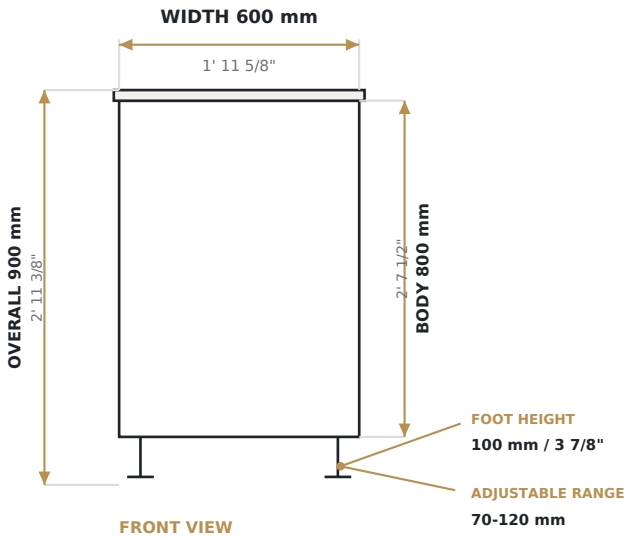

FRONT VIEW

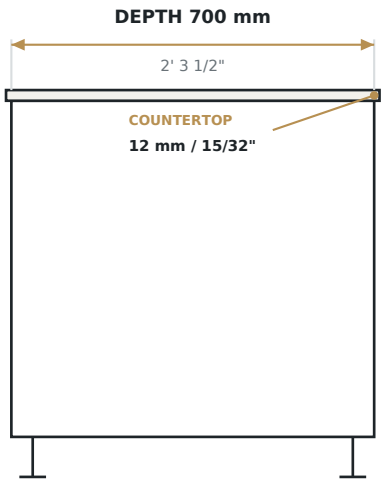

SIDE VIEW

600 Trash Bin

Dual-bin sorting



BODY	CONFIGURATION	NW / GW	FLAT PACK
6063-T5 aluminum	1 door / dual bin	30 / 33 kg	900 × 770 × 250 mm

TECHNICAL DIMENSIONS

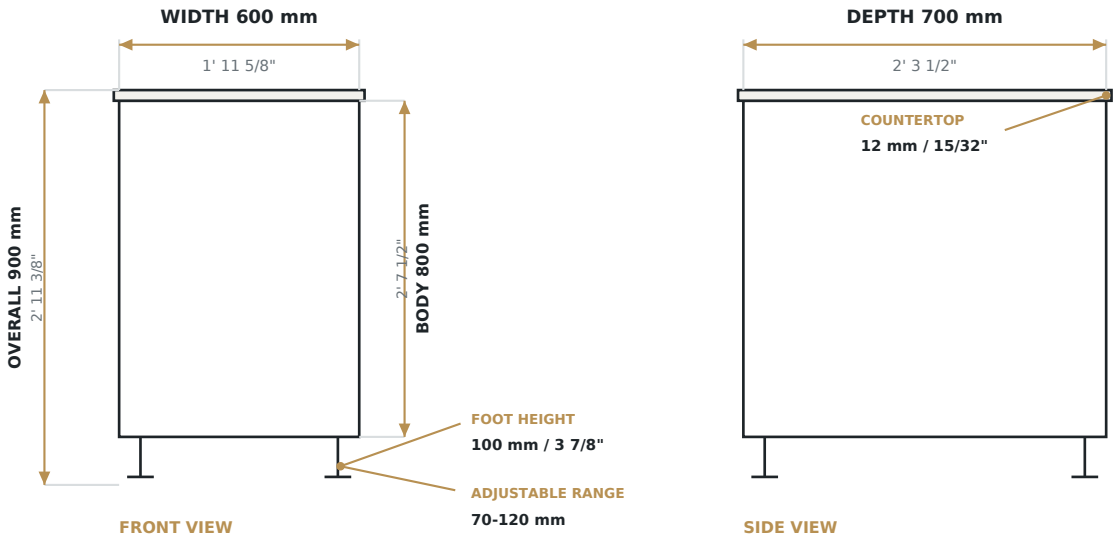

600 Fridge

Beverage cooling



BODY	CONFIGURATION	NW / GW	FLAT PACK
6063-T5 aluminum	Appliance opening	20 / 23 kg	900 × 770 × 180 mm

TECHNICAL DIMENSIONS

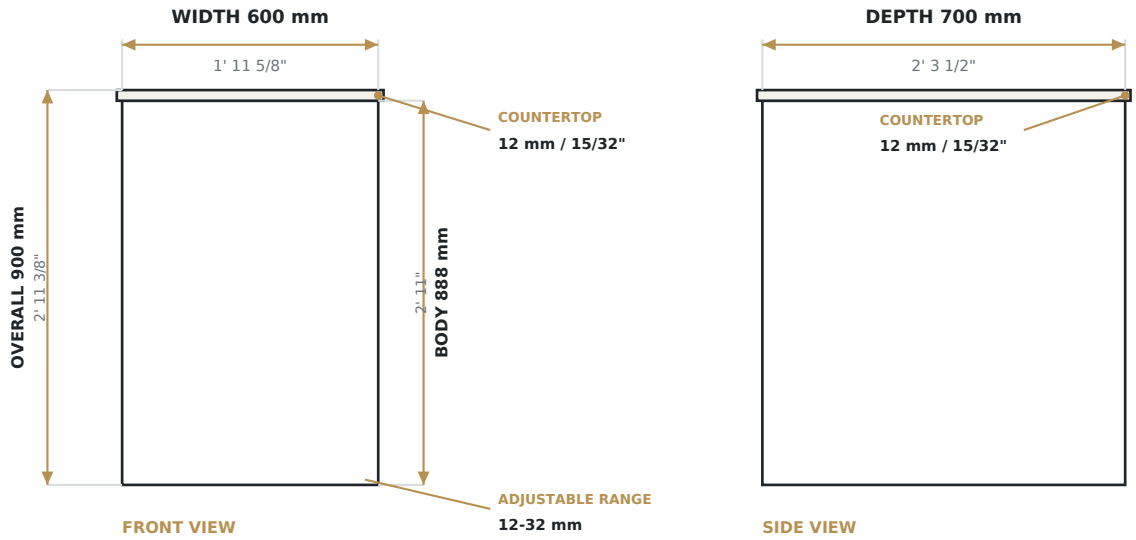

MODULE 12 / 600 SERIES

600 Open

Open shelving



BODY	CONFIGURATION	NW / GW	FLAT PACK
6063-T5 aluminum	3 open shelves	17 / 20 kg	900 × 770 × 150 mm

TECHNICAL DIMENSIONS

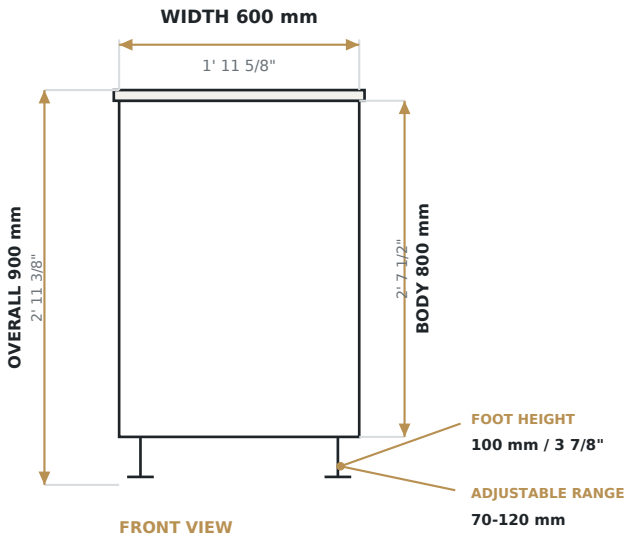

FRONT VIEW

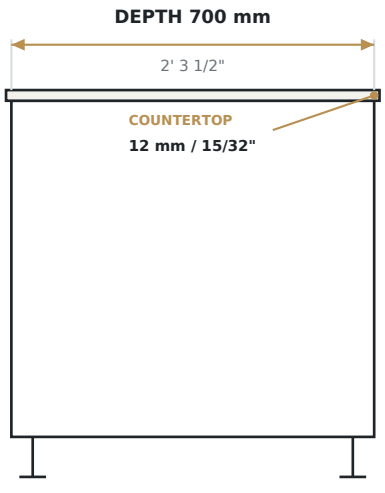

SIDE VIEW

600 Burner

Side burner



BODY	CONFIGURATION	NW / GW	FLAT PACK
6063-T5 aluminum	1 door / burner	20 / 23 kg	900 × 770 × 180 mm

TECHNICAL DIMENSIONS

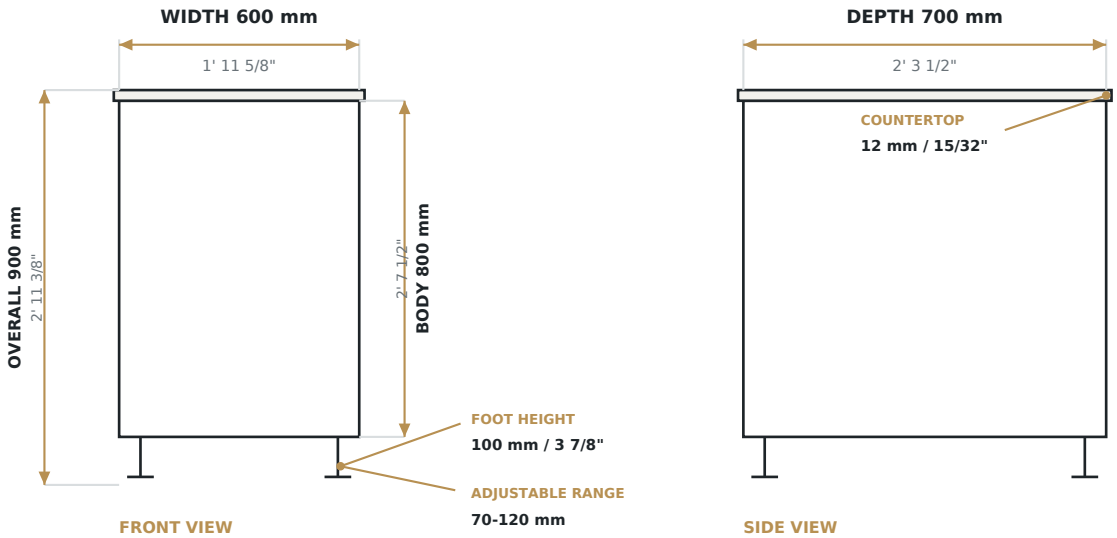

1000 Grill

Built-in grill



BODY	CONFIGURATION	NW / GW	FLAT PACK
6063-T5 aluminum	2 doors / grill	40 / 43 kg	1100 × 930 × 190 mm

TECHNICAL DIMENSIONS

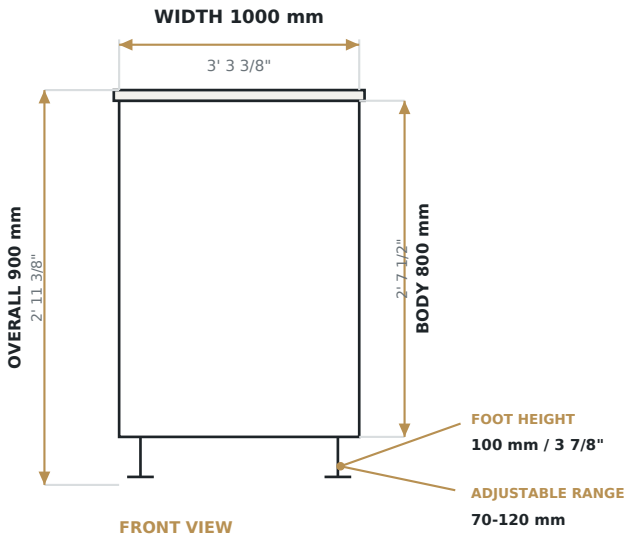

FRONT VIEW

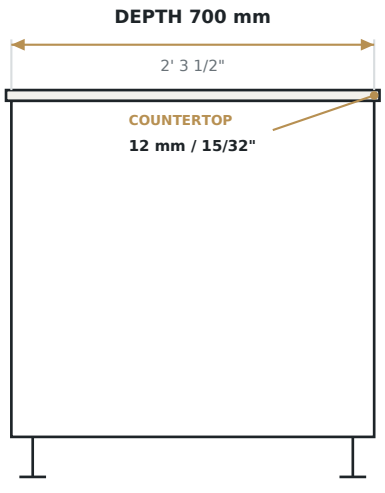

SIDE VIEW

Fridge with Door

Concealed appliance



BODY	CONFIGURATION	NW / GW	FLAT PACK
6063-T5 aluminum	1 overlay door	20 / 23 kg	900 × 770 × 180 mm

TECHNICAL DIMENSIONS

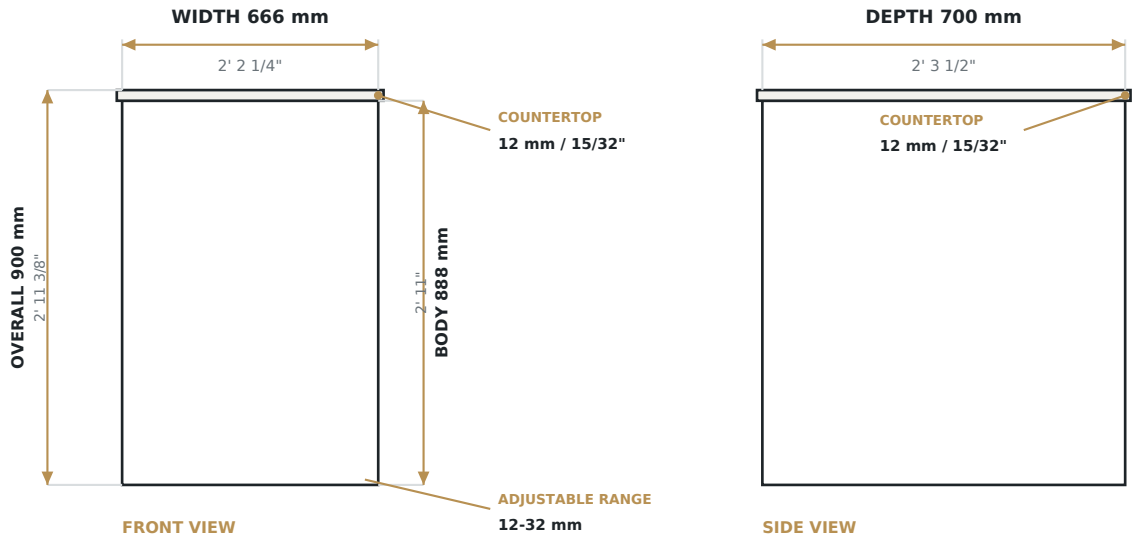

Fridge Module

Dedicated opening



BODY	CONFIGURATION	NW / GW	FLAT PACK
6063-T5 aluminum	Appliance opening	17 / 20 kg	900 × 770 × 180 mm

TECHNICAL DIMENSIONS

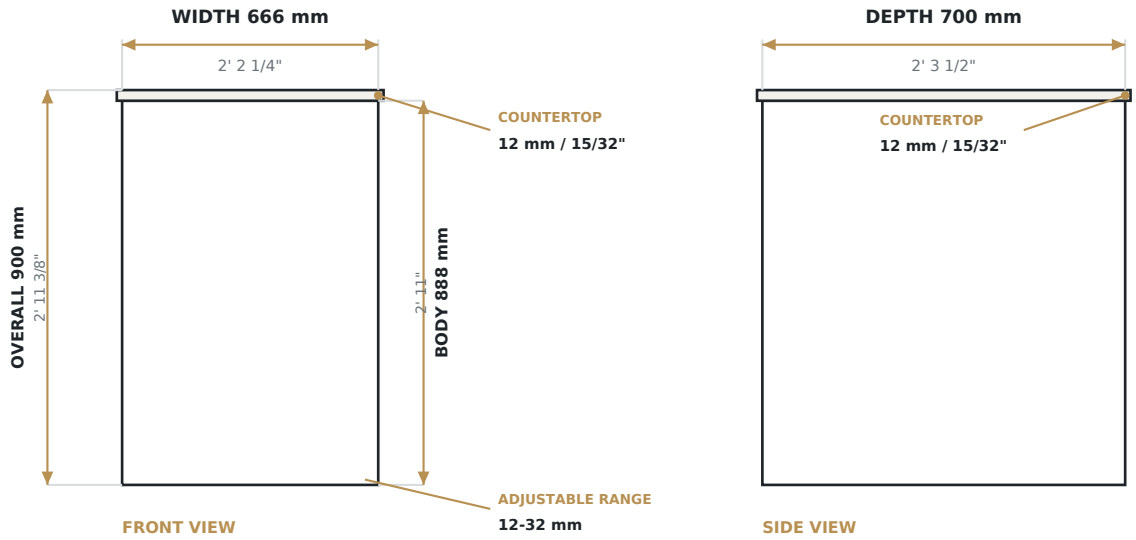

Corner Panel

Panel-built transition



BODY	CONFIGURATION	NW / GW	FLAT PACK
6063-T5 aluminum	2 panels / 90° join	5 / 7 kg	900 × 870 × 100 mm

TECHNICAL DIMENSIONS

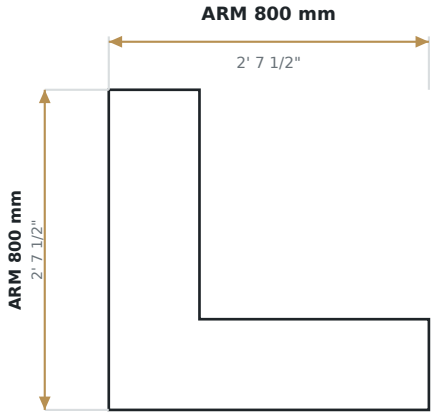

TOP VIEW / 90° PANEL

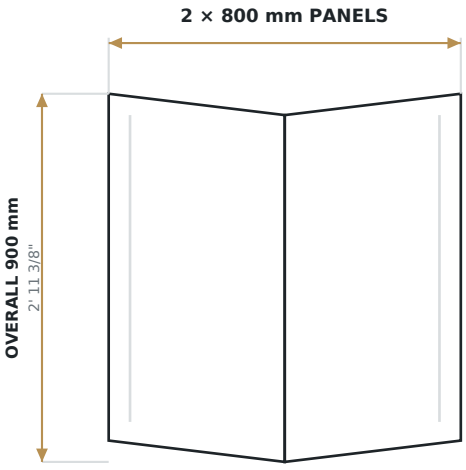

TWO-PANEL ELEVATION

NO STORAGE CABINET BODY

MODULE 18 / CORNER SERIES

Corner Cabinet

CAD-defined diamond corner



BODY	CONFIGURATION	NW / GW	FLAT PACK
6063-T5 aluminum	1 door / panelled frame	37 / 40 kg	1100 × 900 × 350 mm

TECHNICAL DIMENSIONS

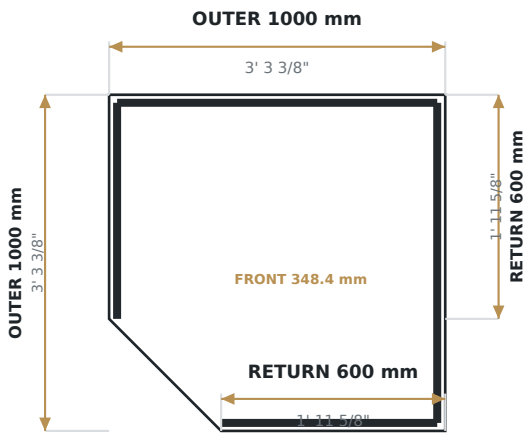

TOP VIEW / DIAMOND CORNER

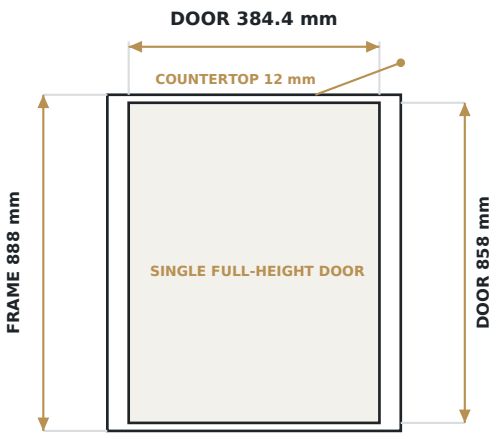

FRONT / DIAGONAL ELEVATION

04 / PERSONALIZE THE FINISH

Coordinate every visible surface.

Select the countertop and powder-coated cabinet color to suit the project.

COUNTERTOP OPTIONS



HPL · 12 MM

SINTERED STONE · 12 MM



304 STAINLESS · 12 MM

POWDER-COATED COLORS



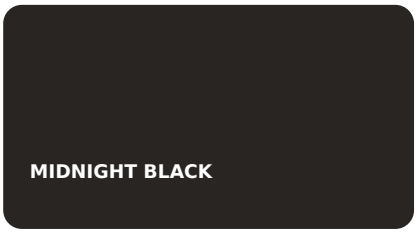

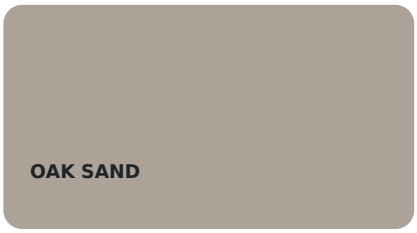

OUTDOOR FINISH PERFORMANCE

UV RESISTANT

Helps resist fading and chalking.

CORROSION PROTECTED

Designed for rain, humidity and salt air.

SCRATCH RESISTANT

Durable bonded powder-coated surface.

EASY CARE

Simple routine cleaning for outdoor use.

Full cabinet view. Construction detail.

Compare the installed appearance with the edge, joint and surface construction.

MAIN VIEW



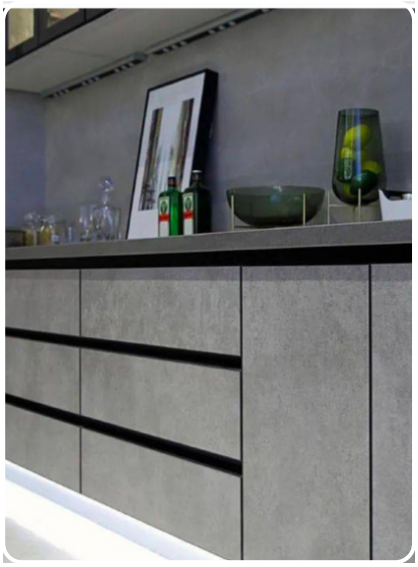



CONSTRUCTION DETAIL



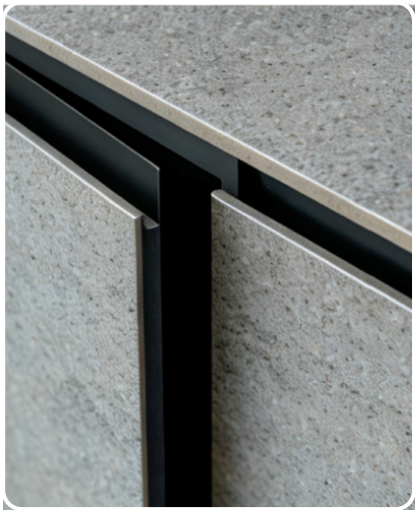



SEAMLESS WELDED ALUMINUM DOOR

SINTERED STONE DOOR

ROUNDED-EDGE ALUMINUM DOOR

Decorative fronts, engineered as a system

Two coordinated options add texture and warmth while retaining a modular cabinet structure.

MAIN VIEW





CONSTRUCTION DETAIL





VERTICAL STRIP ALUMINUM DECORATIVE DOOR

SPC-ALUMINUM COMPOSITE DOOR

06 / BUILT FOR OUTDOOR LIVING

Engineered for lasting performance

Weather-ready materials, serviceable modules and replaceable hardware support long-term use.

10

YEAR CABINET WARRANTY

Coverage for the cabinet system.

3

YEAR HARDWARE WARRANTY

Coverage for specified hardware.

PLAN. COMBINE. EVOLVE.

A modular outdoor kitchen that can change with your space.

SHORELUX

Modular outdoor kitchen systems

Contact your ShoreLuX representative for final planning, appliance compatibility and project pricing.