ShoreLuX

OUTDOOR KITCHENS

Modular Cabinet System



Step1: Choose the layout

Combination Outcome



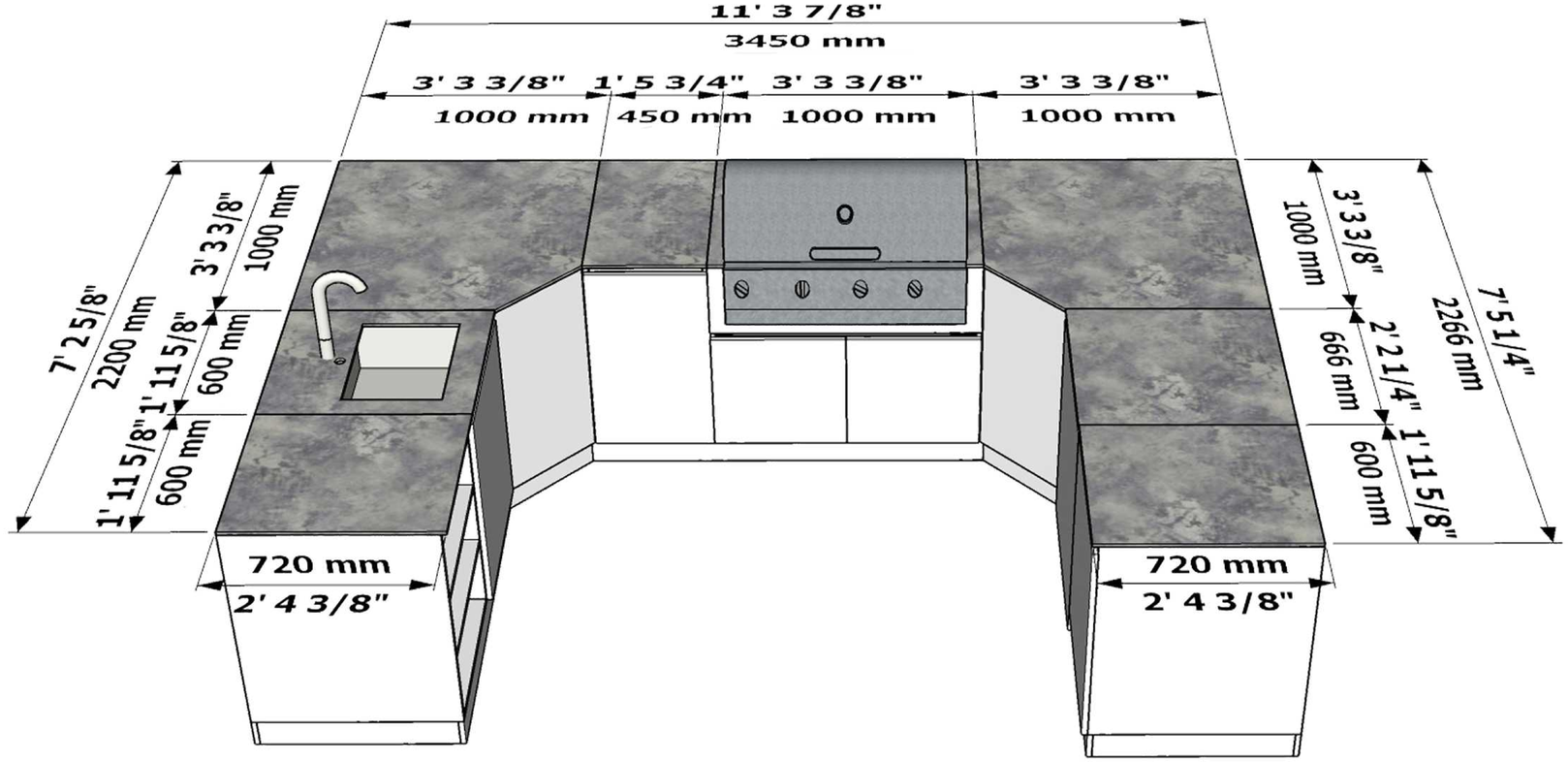

Color Choice: Titanium Grey / Midnight Black / Oak Sand

Adjustabe range: 70 - 120 mm

Combination Outcome



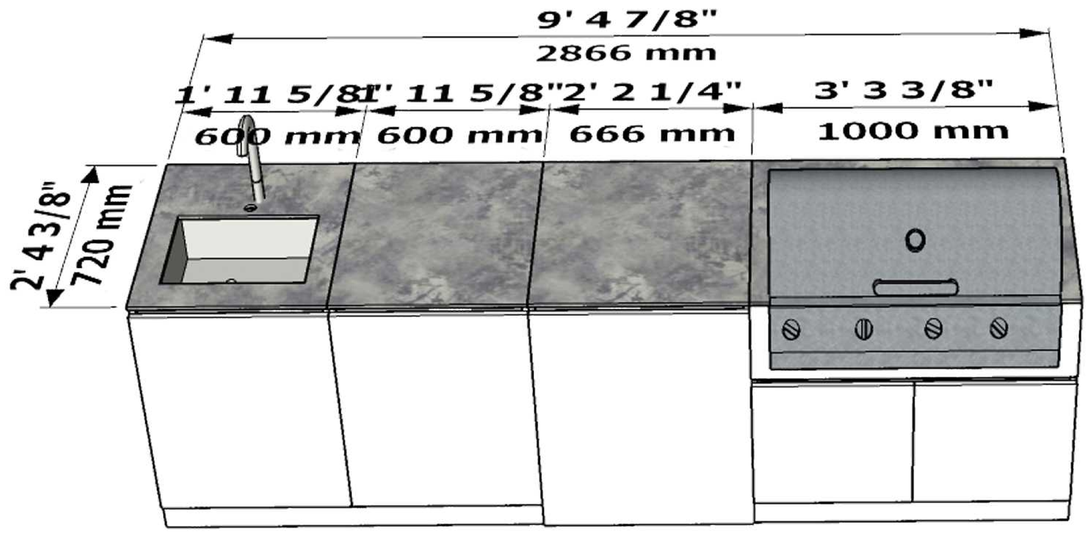



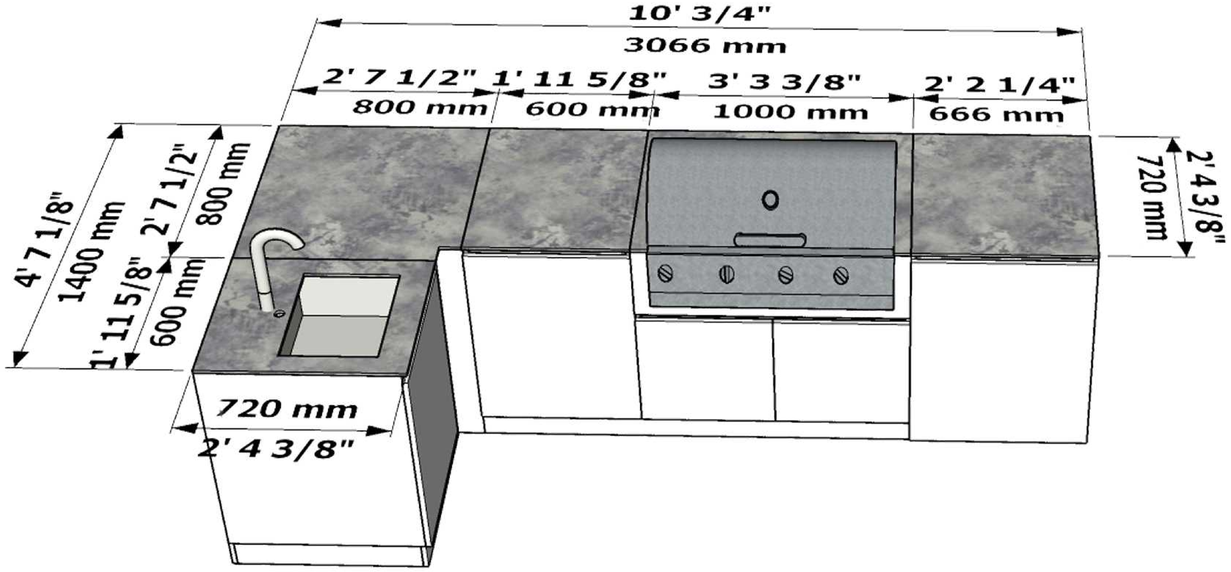

Color Choice: Titanium Grey / Midnight Black / Oak Sand

Adjustabe range: 70 - 120 mm

Step 2: Choose the functions /modules

450 Trash Bin





SPECIFICATIONS

Countertop Material: Sintered stone / 304 stainless steel / HPL countertop

Body Material: Durable weather proof powder coated 6063-T5 aluminum.

Number of Doors: 1

Soft Close Hinge: √

Trash Bin: √

Adjustable Feet: √

Door Material: alunminam / sintered stone / SPC / HPL

NW / GW: 27kg / 30kg **Package size:** 900 * 770 * 250 mm

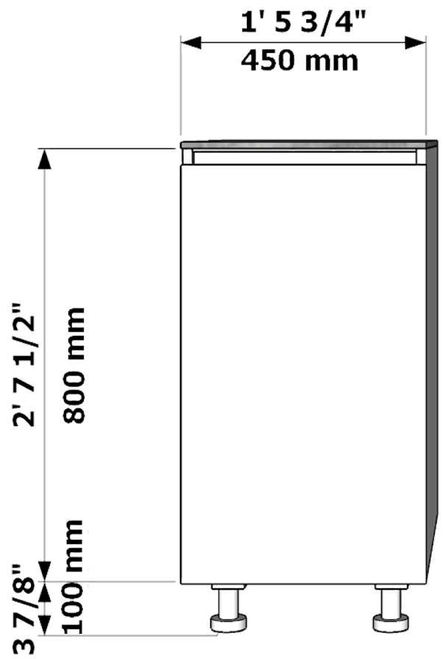

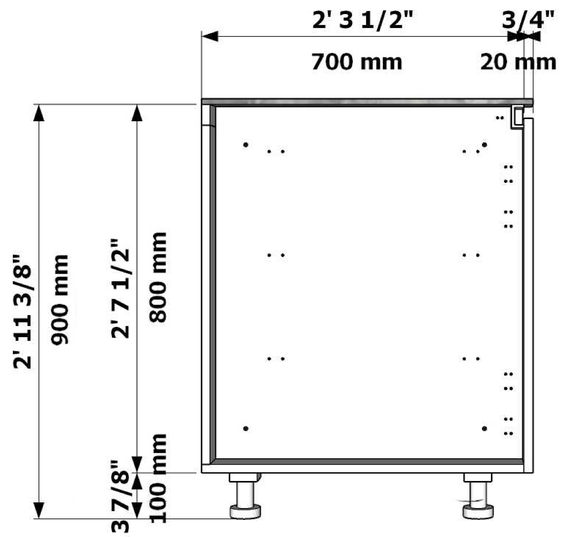

Color Choice: Titanium Grey / Midnight Black / Oak Sand

Adjustabe range: 70 - 120 mm

450 Pull–up Basket





SPECIFICATIONS

Countertop Material: Sintered stone / 304 stainless steel / HPL countertop

Body Material: Durable weather proof powder coated 6063-T5 aluminum.

Number of Doors: 1

Soft Close Hinge: √

Pull–up Basket: √

Adjustable Feet: √

Door Material: alunminam / sintered stone / SPC / HPL

NW / GW: 27kg / 30kg **Package size:** 900 * 770 * 250 mm

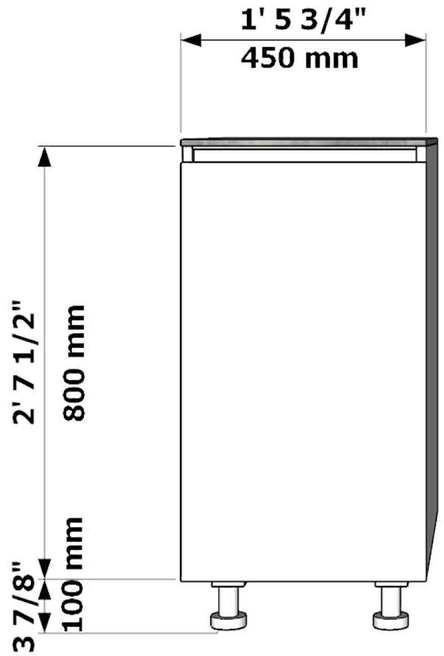

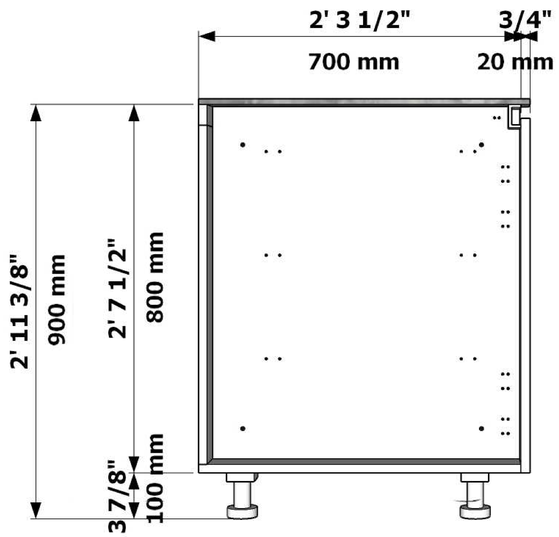

Color Choice: Titanium Grey / Midnight Black / Oak Sand

Adjustabe range: 70 - 120 mm

450 Fridge





SPECIFICATIONS

Countertop Material: Sintered stone / 304 stainless steel / HPL countertop

Body Material: Durable weather proof powder coated 6063-T5 aluminum.

Number of Doors:

Soft Close Hinge: √

Gas Bottle Support:

Adjustable Feet: √

Door Material: alunminam / sintered stone / SPC / HPL

NW / GW: 15kg / 17kg **Package size:** 900 * 770 * 150 mm

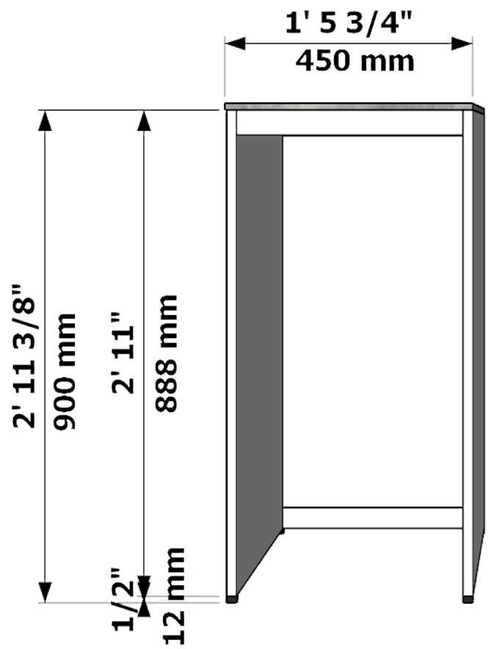

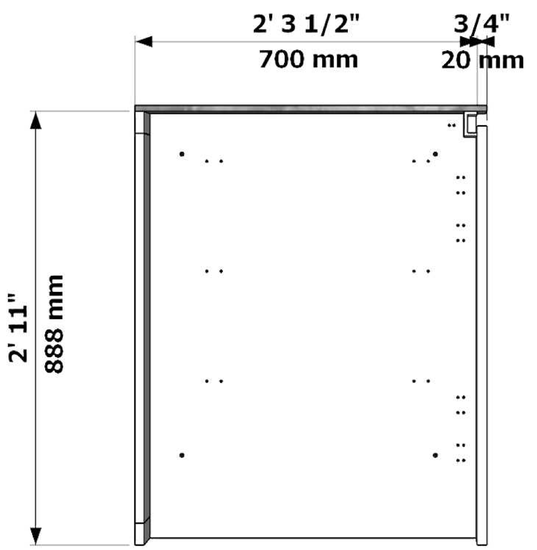

Color Choice: Titanium Grey / Midnight Black / Oak Sand

Adjustabe range: 12 - 32 mm

450 Ice maker





SPECIFICATIONS

Countertop Material: Sintered stone / 304 stainless steel / HPL countertop

Body Material: Durable weather proof powder coated 6063-T5 aluminum.

Number of Doors:

Soft Close Hinge: √

Gas Bottle Support:

Adjustable Feet: √

Door Material: alunminam / sintered stone / SPC / HPL

NW / GW: 15kg / 17kg **Package size:** 900 * 770 * 150 mm

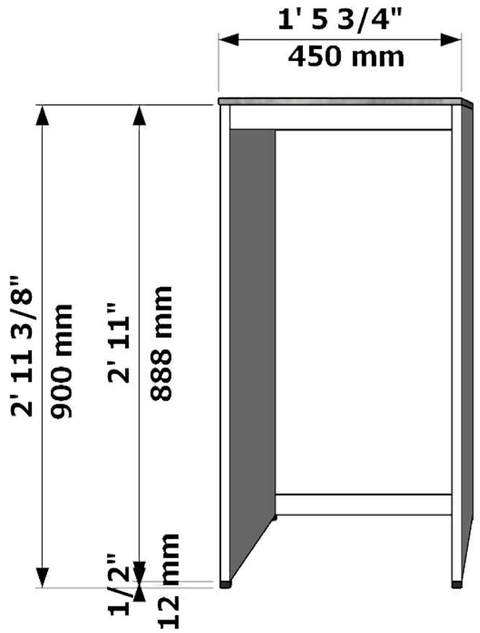

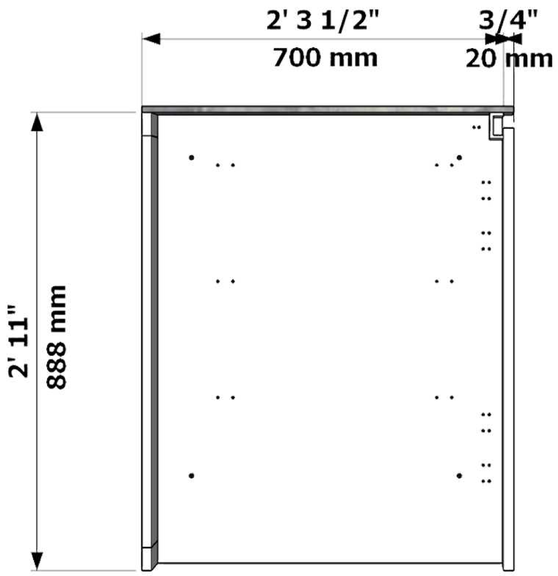

Color Choice: Titanium Grey / Midnight Black / Oak Sand

Adjustabe range: 12 - 32 mm

600 Sink





SPECIFICATIONS

Countertop Material: Sintered stone / 304 stainless steel / HPL countertop

Body Material: Durable weather proof powder coated 6063-T5 aluminum.

Number of Doors: 1

Soft Close Hinge: √

Sink and Tap: √

Adjustable Feet: √

Door Material: alunminam / sintered stone / SPC / HPL

NW / GW: 30kg / 33kg **Package size:** 900 * 770 * 250 mm

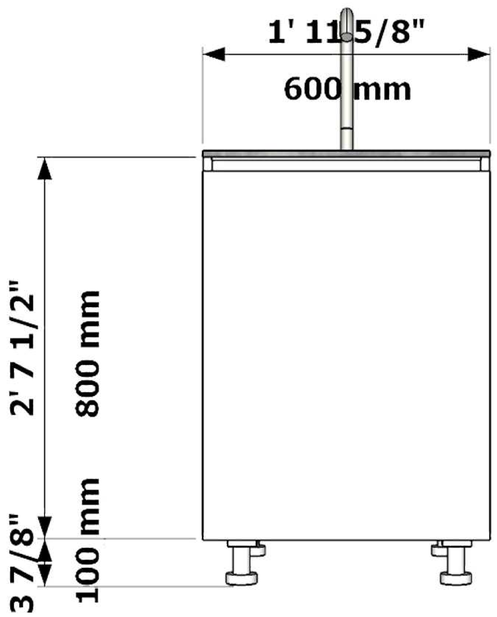

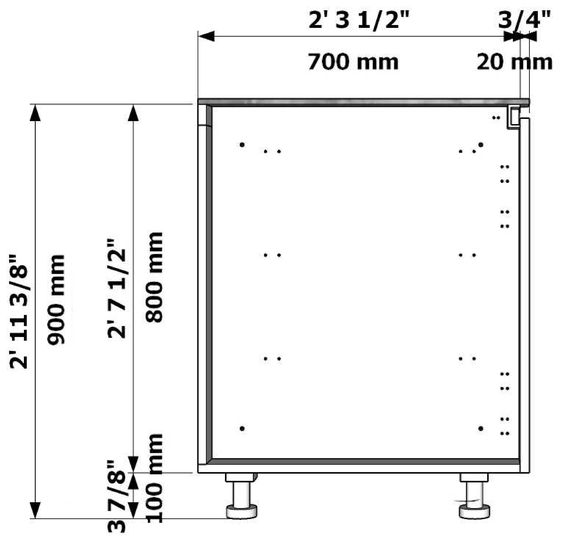

Color Choice: Titanium Grey / Midnight Black / Oak Sand

Adjustabe range: 70 - 120 mm

600 Drawers





SPECIFICATIONS

Countertop Material: Sintered stone / 304 stainless steel / HPL countertop

Body Material: Durable weather proof powder coated 6063-T5 aluminum.

Number of Doors: 3

Soft Close Hinge: √

Gas Bottle Support:

Adjustable Feet: √

Door Material: alunminam / sintered stone / SPC / HPL

NW / GW: 35kg / 38kg **Package size:** 900 * 770 * 250 mm

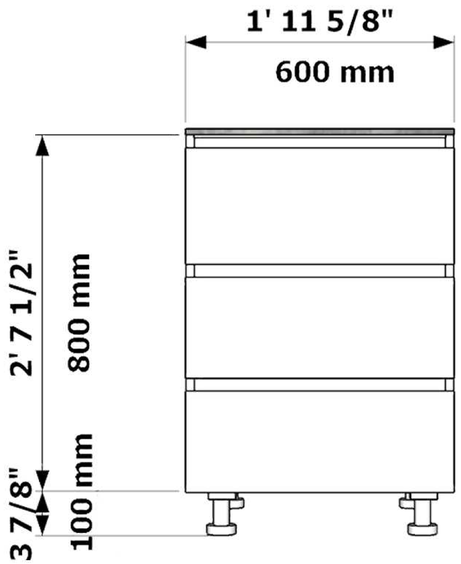

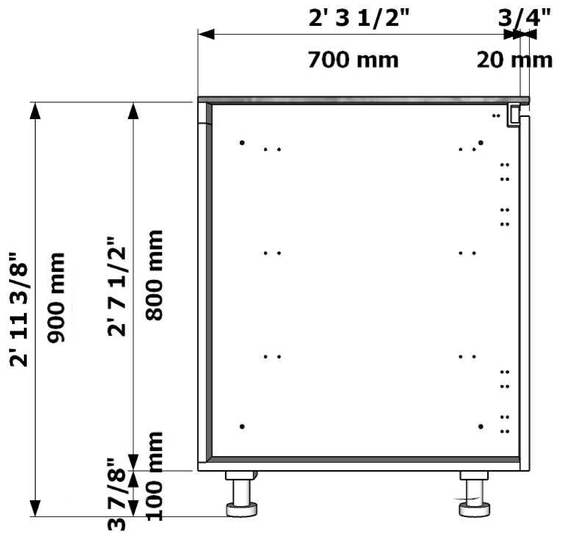

Color Choice: Titanium Grey / Midnight Black / Oak Sand

Adjustabe range: 70 - 120 mm

600 Storage





SPECIFICATIONS

Countertop Material: Sintered stone / 304 stainless steel / HPL countertop

Body Material: Durable weather proof powder coated 6063-T5 aluminum.

Number of Doors: 1

Soft Close Hinge: √

Gas Bottle Support:

Adjustable Feet: √

Door Material: alunminam / sintered stone / SPC / HPL

NW / GW: 20kg / 23kg **Package size:** 900 * 770 * 180 mm

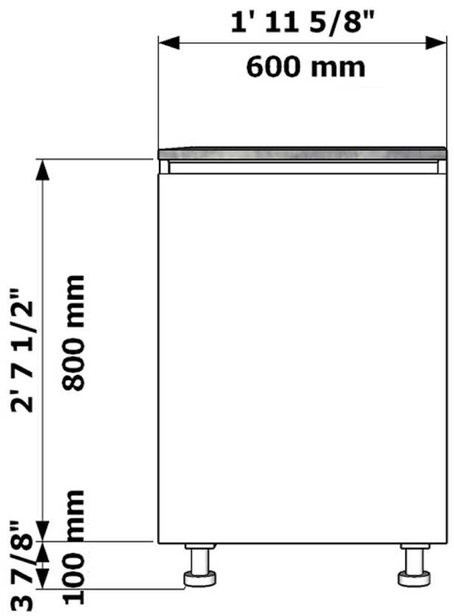

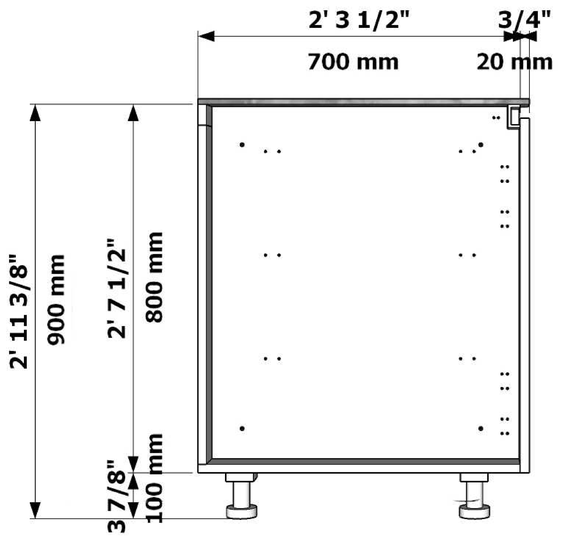

Color Choice: Titanium Grey / Midnight Black / Oak Sand

Adjustabe range: 70 - 120 mm

600 Pull–up Basket





SPECIFICATIONS

Countertop Material: Sintered stone / 304 stainless steel / HPL countertop

Body Material: Durable weather proof powder coated 6063-T5 aluminum.

Number of Doors: 1

Soft Close Hinge: √

Pull–up Basket: √

Adjustable Feet: √

Door Material: alunminam / sintered stone / SPC / HPL

NW / GW: 30kg / 33kg **Package size:** 900 * 770 * 250 mm

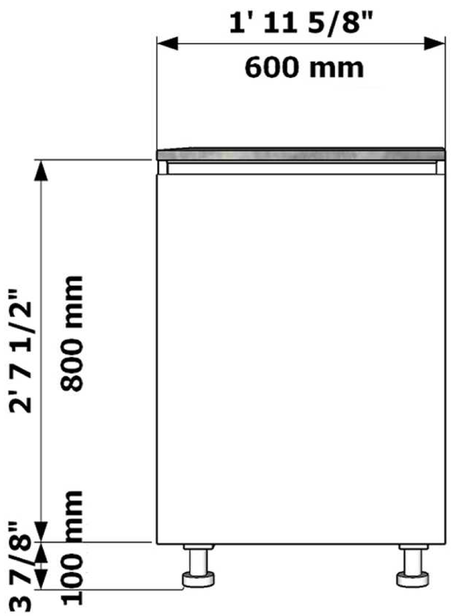

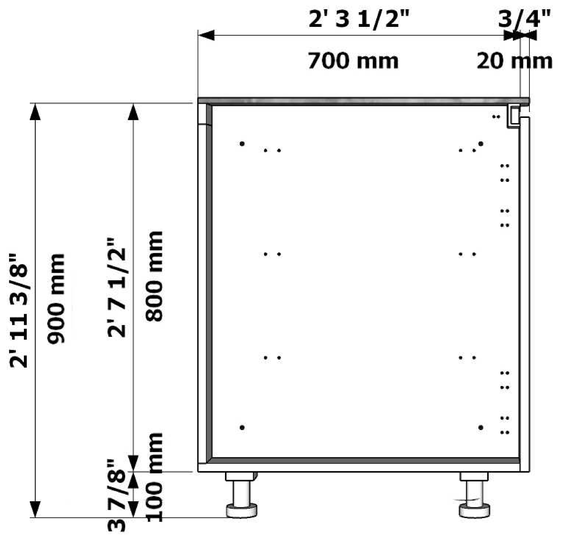

Color Choice: Titanium Grey / Midnight Black / Oak Sand

Adjustabe range: 70 - 120 mm

600 Bowl Basket





SPECIFICATIONS

Countertop Material: Sintered stone / 304 stainless steel / HPL countertop

Body Material: Durable weather proof powder coated 6063-T5 aluminum.

Number of Doors: 1

Soft Close Hinge: √

Bowl Basket: √

Adjustable Feet: √

Door Material: alunminam / sintered stone / SPC / HPL

NW / GW: 30kg / 33kg **Package size:** 900 * 770 * 250 mm

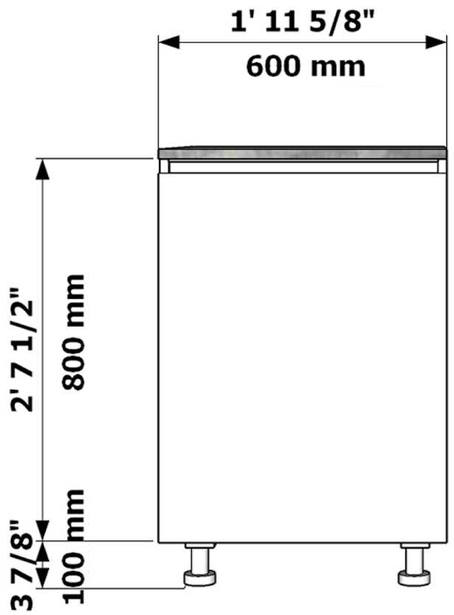

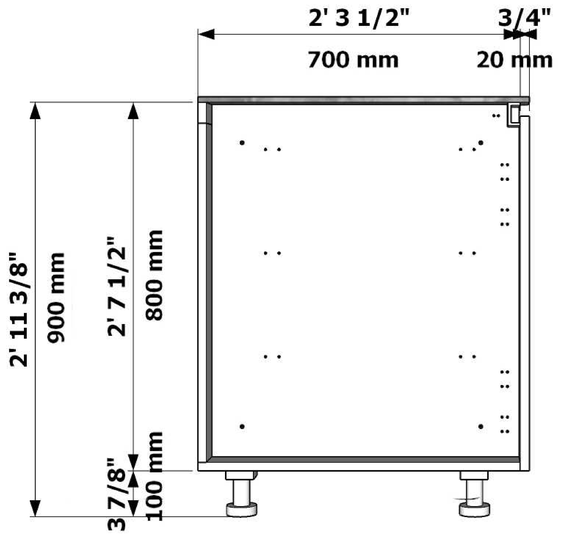

Color Choice: Titanium Grey / Midnight Black / Oak Sand

Adjustabe range: 70 - 120 mm

600 Trash Bin





SPECIFICATIONS

Countertop Material: Sintered stone / 304 stainless steel / HPL countertop

Body Material: Durable weather proof powder coated 6063-T5 aluminum.

Number of Doors: 1

Soft Close Hinge: √

Trash Bin: √

Adjustable Feet: √

Door Material: alunminam / sintered stone / SPC / HPL

NW / GW: 30kg / 33kg **Package size:** 900 * 770 * 250 mm

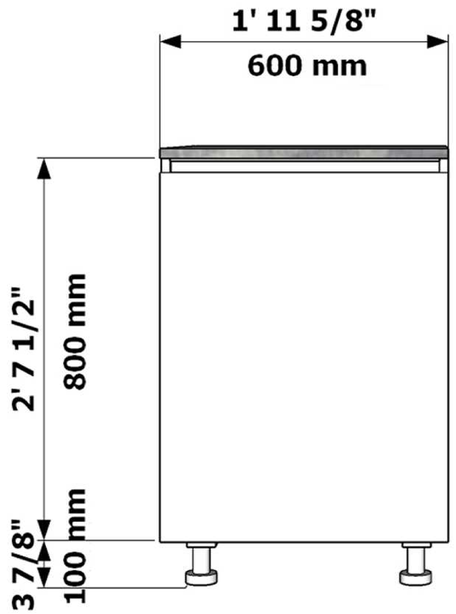

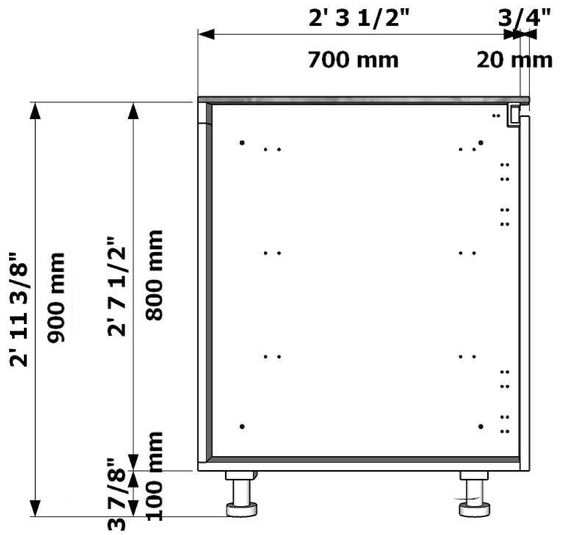

Color Choice: Titanium Grey / Midnight Black / Oak Sand

Adjustabe range: 70 - 120 mm

600 Fridge





SPECIFICATIONS

Countertop Material: Sintered stone / 304 stainless steel / HPL countertop

Body Material: Durable weather proof powder coated 6063-T5 aluminum.

Number of Doors: 1

Soft Close Hinge: √

Gas Bottle Support:

Adjustable Feet: √

Door Material: alunminam / sintered stone / SPC / HPL

NW / GW: 20kg / 23kg **Package size:** 900 * 770 * 180 mm

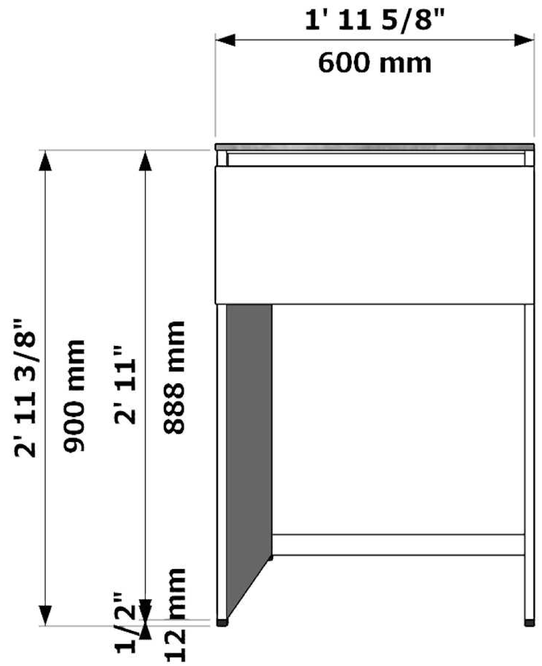

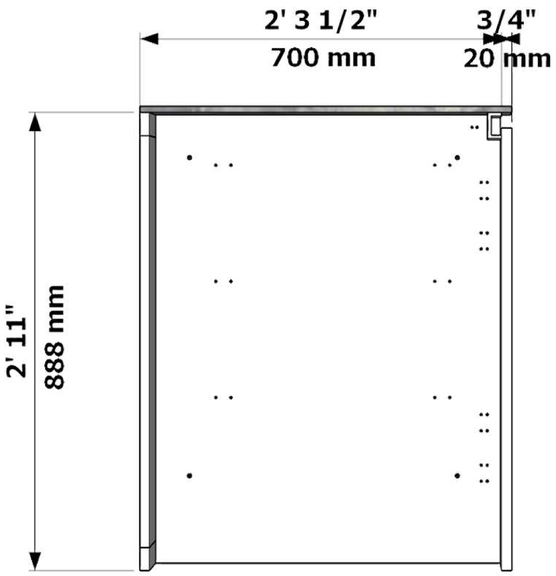

Color Choice: Titanium Grey / Midnight Black / Oak Sand

Adjustabe range: 12 - 32 mm

600 Open



SPECIFICATIONS

Countertop Material: Sintered stone / 304 stainless steel / HPL countertop

Body Material: Durable weather proof powder coated 6063-T5 aluminum.

Number of Shelves: 3

Soft Close Hinge:

Gas Bottle Support:

Adjustable Feet: √

Door Material: alunminam / sintered stone / SPC / HPL

NW / GW: 17kg / 20kg **Package size:** 900* 770* 150 mm

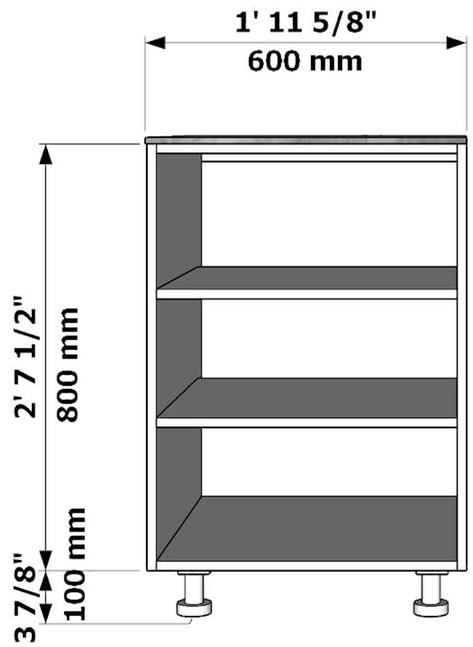

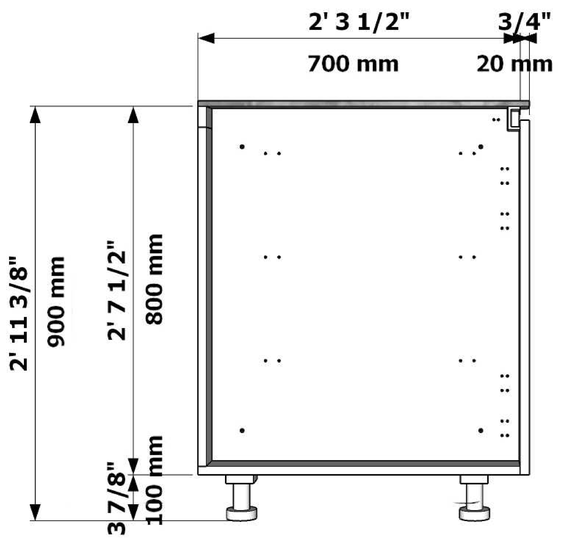

Color Choice: Titanium Grey / Midnight Black / Oak Sand

Adjustabe range: 70 - 120 mm

600 Burner





Color Choice: Titanium Grey / Midnight Black / Oak Sand

SPECIFICATIONS

Countertop Material: Sintered stone / 304 stainless steel / HPL countertop

Body Material: Durable weather proof powder coated 6063-T5 aluminum.

Number of Doors: 1

Soft Close Hinge: √

Gas Bottle Support:

Adjustable Feet: √

Door Material: alunminam / sintered stone / SPC / HPL

NW / GW: 20kg / 23kg **Package size:** 900 * 770 * 180 mm

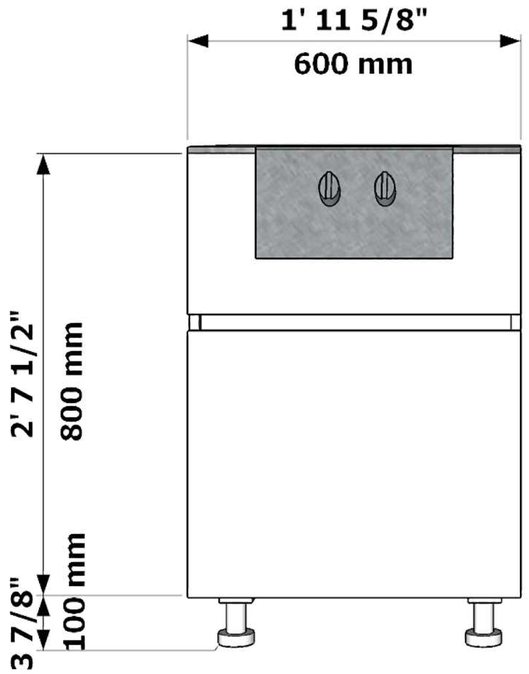

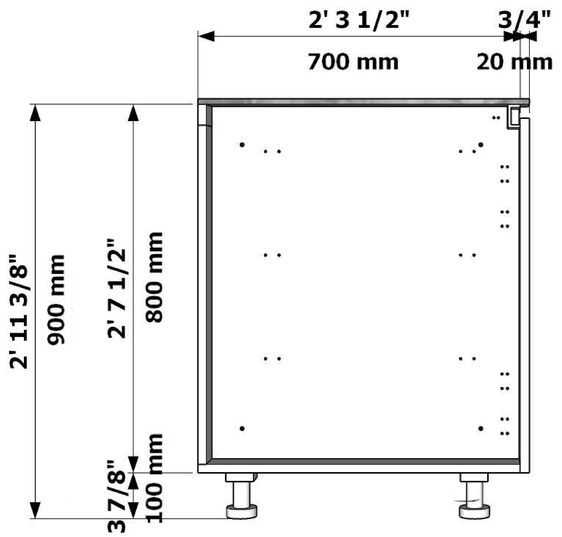

Adjustabe range: 70 - 120 mm

1000 Grill





SPECIFICATIONS

Countertop Material: Sintered stone / 304 stainless steel / HPL countertop

Body Material: Durable weather proof powder coated 6063-T5 aluminum.

Number of Doors: 2

Soft Close Hinge: √

Gas Bottle Support: √

Adjustable Feet: √

Door Material: alunminam / sintered stone / SPC / HPL

NW / GW: 40kg / 43kg **Package size:** 1100 * 930* 190 mm

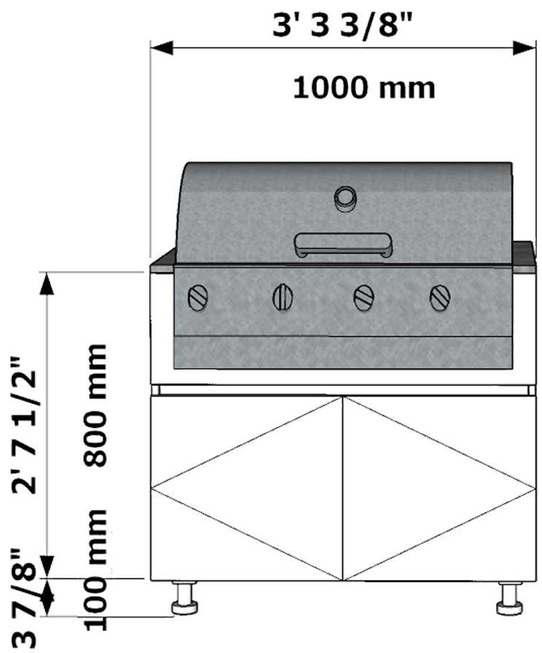

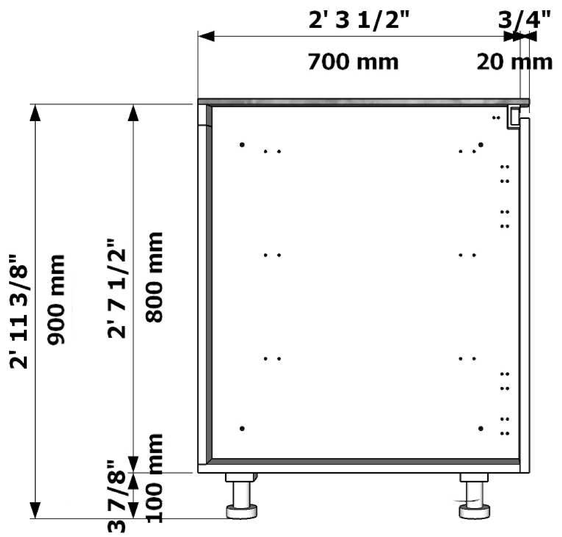

Color Choice: Titanium Grey / Midnight Black / Oak Sand

Adjustabe range: 70 - 120 mm

Fridge with Door





SPECIFICATIONS

Countertop Material: Sintered stone / 304 stainless steel / HPL countertop

Body Material: Durable weather proof powder coated 6063-T5 aluminum.

Number of Doors: 1

Soft Close Hinge: √

Gas Bottle Support:

Adjustable Feet: √

Door Material: alunminam / sintered stone / SPC / HPL

NW / GW: 20kg / 23kg **Package size:** 900 * 770 * 180 mm

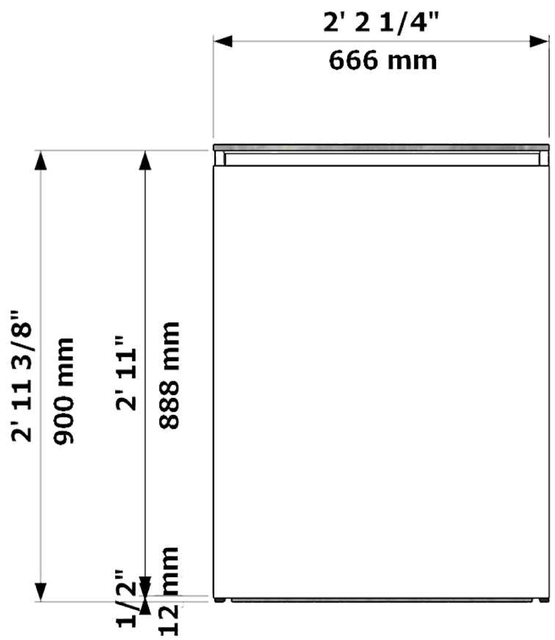

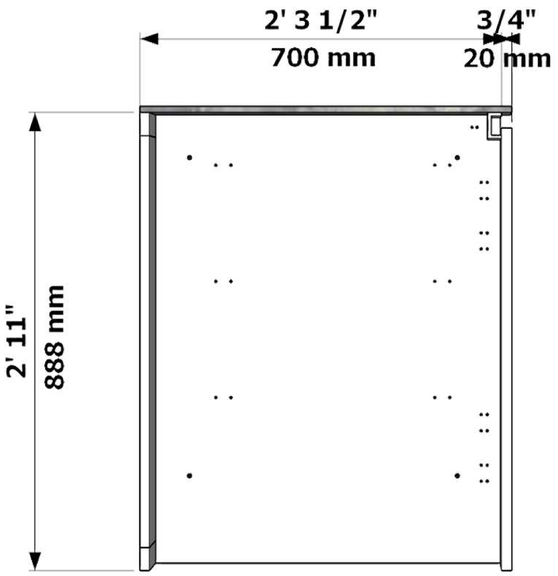

Color Choice: Titanium Grey / Midnight Black / Oak Sand

Adjustabe range: 12 - 32 mm

Fridge





SPECIFICATIONS

Countertop Material: Sintered stone / 304 stainless steel / HPL countertop

Body Material: Durable weather proof powder coated 6063-T5 aluminum.

Number of Doors:

Soft Close Hinge: √

Gas Bottle Support:

Adjustable Feet: √

Door Material: alunminam / sintered stone / SPC / HPL

NW / GW: 17kg / 20kg **Package size:** 900 * 770 * 180 mm

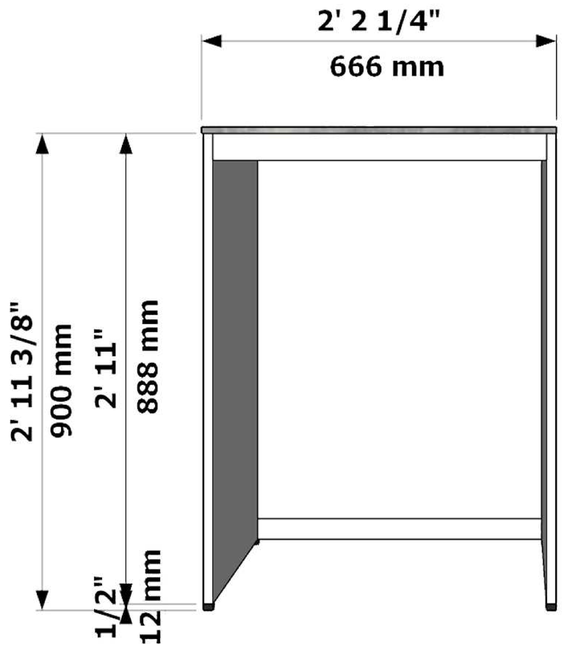

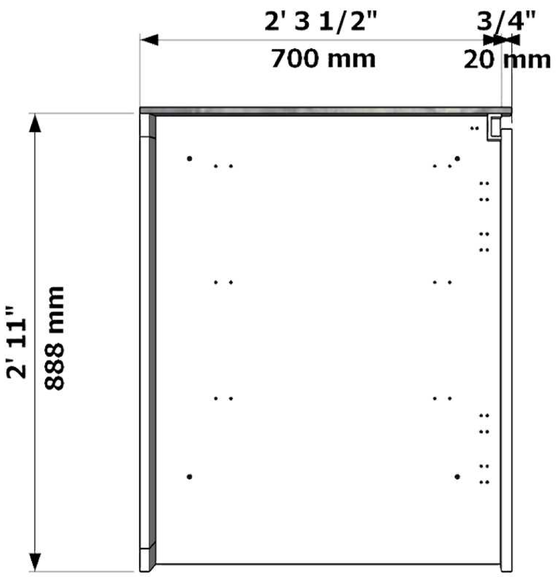

Color Choice: Titanium Grey / Midnight Black / Oak Sand

Adjustabe range: 12 - 32 mm

Corner Panel



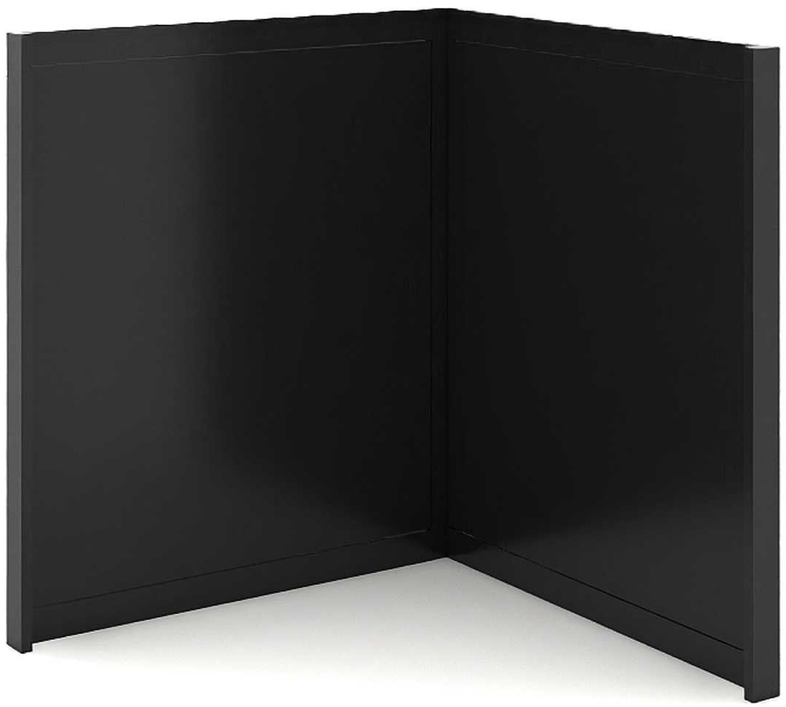

SPECIFICATIONS

Countertop Material: Sintered stone / 304 stainless steel / HPL countertop

Body Material: Durable weather proof powder coated 6063-T5 aluminum.

Number of Doors:

Soft Close Hinge:

Gas Bottle Support:

Adjustable Feet: √

Door Material:

NW / GW: 5kg / 7kg **Package size:** 900 * 870 * 100 mm

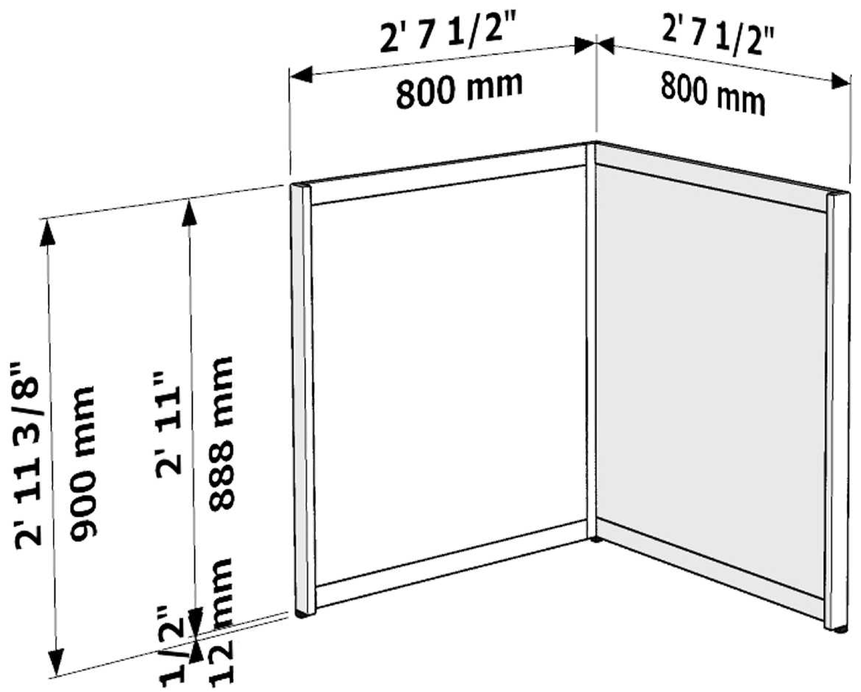

Color Choice: Titanium Grey / Midnight Black / Oak Sand

Adjustabe range: 12 - 32 mm

Corner Cabinet





SPECIFICATIONS

Countertop Material: Sintered stone / 304 stainless steel / HPL countertop

Body Material: Durable weather proof powder coated 6063-T5 aluminum.

Number of Doors: 1

Soft Close Hinge: √

Gas Bottle Support: √

Adjustable Feet: √

Door Material: alunminam / sintered stone / SPC / HPL

NW / GW: 37kg / 40kg **Package size:** 1100 * 900 * 350 mm

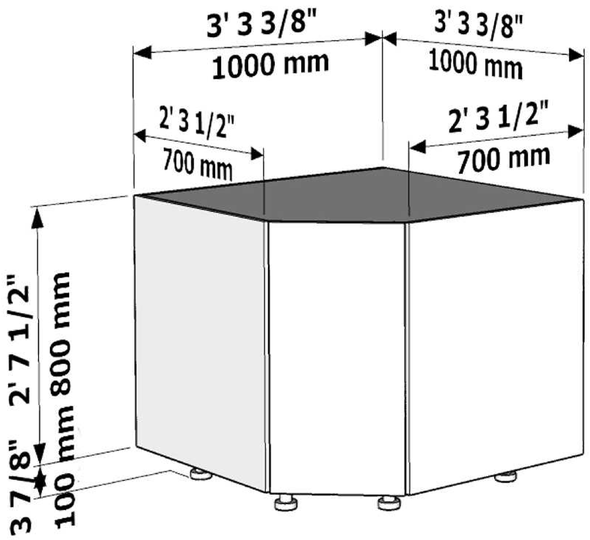

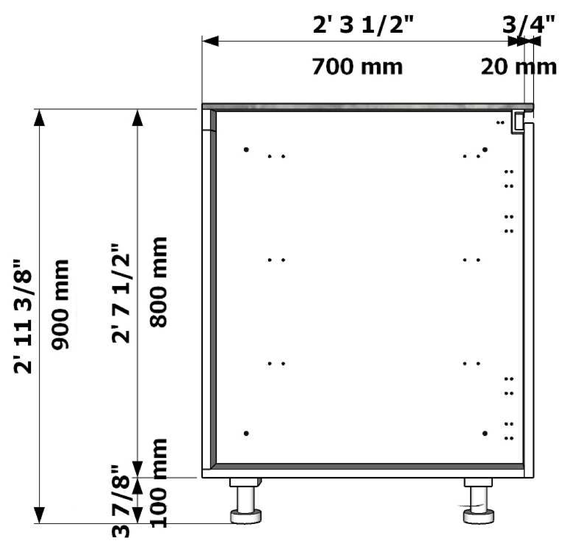

Color Choice: Titanium Grey / Midnight Black / Oak Sand

Adjustabe range: 70 - 120 mm

Step 3: Choose the countertop material

Countertop







Standard Countertop Thickness: 12mm 20mm 30mm

Water, sun, scratch resistant, easy to clean

Step4: Choose the door style

Cabinet Door Collection



Vertical Strip Aluminum Decorative Door



SPC-Aluminurn Composite Door

Cabinet Door Collection



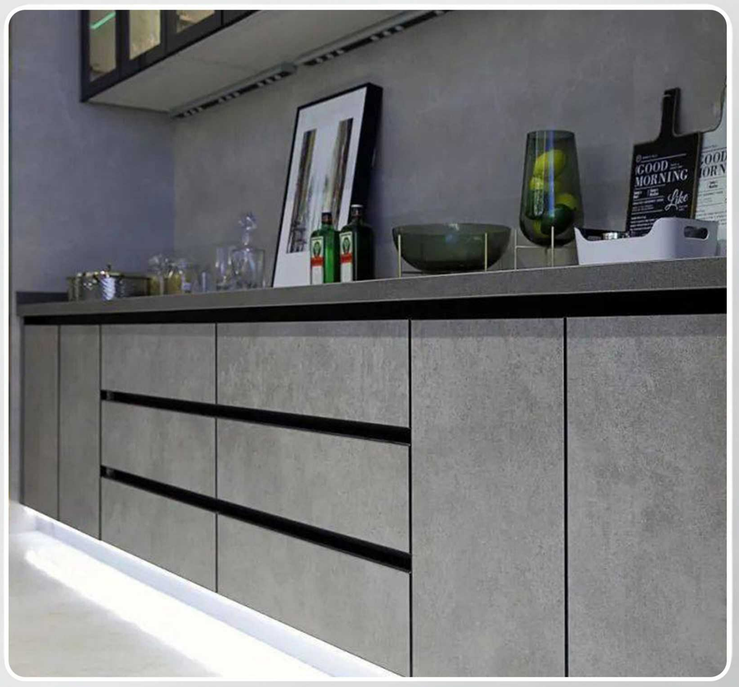





Seamless Welded Door

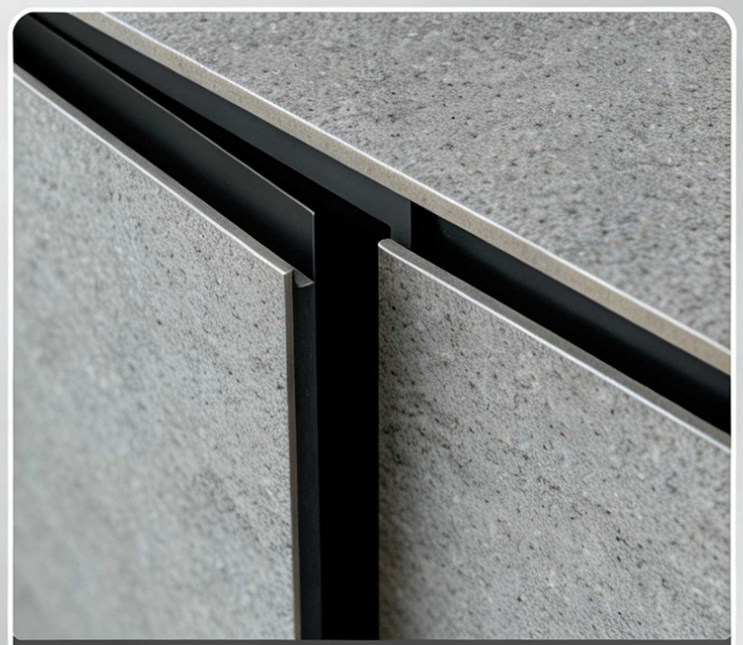

Sintered Stone Door



Rounded-Edge Aluminum Door

Step5: Choose the Cabinet color

COLOR

Our cabinets use outdoor powder coating technology, with multi-stage pretreatment and high-temperature curing to create a dense protective layer bonded to the aluminum :

Titanium Grey

Midnight Black

Oak Sand

- **UV resistance** — prevents fading and chalking
- **Corrosion protection** — withstands rain, humidity, and salt air
- **Scratch resistance** — strong adhesion, not easy to peel
- **Eco-friendly** — solvent-free, low VOC

Each production batch is tested for weathering and salt-spray performanceto ensure durability in real outdoor applications.


WARRANTY
10 YEAR
CABINET
WARRANTY
3 YEAR
HARDWARE
WARRANTY
10-Year Cabinet Warranty
3-Year Hardware Warranty

ShoreLuX

MODULAR OUTDOOR KITCHENS

Shoreline Outdoor Kitchens

shorelineoutdoorkitchens.com

609-560-9150

shorelineoutdoorkitchens@aol.com